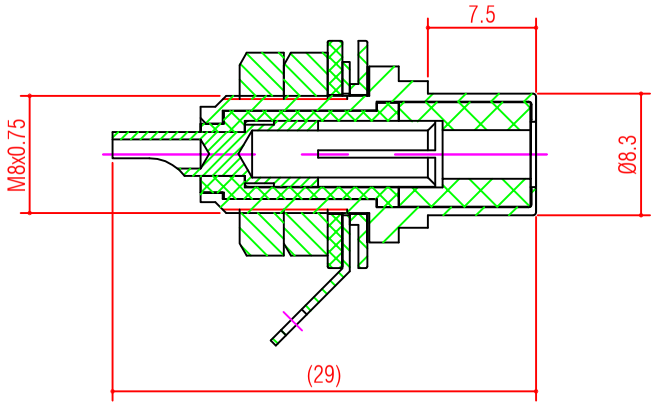

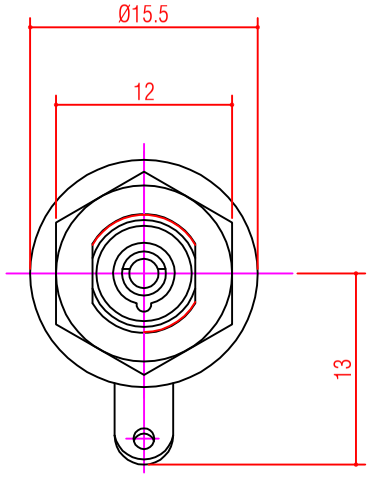

Note: "x" indicates color of rubber ring.

NYS367-x

None or 0 - Black
2 - Red
4 - Yellow
5 - Green
6 - Blue
9 - White

Rev.	Revision Details	Date	Name

THIS DOCUMENT IS THE PROPERTY OF NEUTRIK. NO PART THEREOF MAY BE REPRODUCED AND USED WITHOUT THE PRIOR WRITTEN CONSENT OF THE OWNER

Material:	Scale:		Date:	Name:
	2 : 1	Designer:	2020.11.13	Jacky Zhang
		Checked:	2020.11.13	Xiaonan Wang
		Approved:		

Title: NYS367-9

Replaced By: 1

Replaces: 1

REAN

Drawing No.: 3.652.052